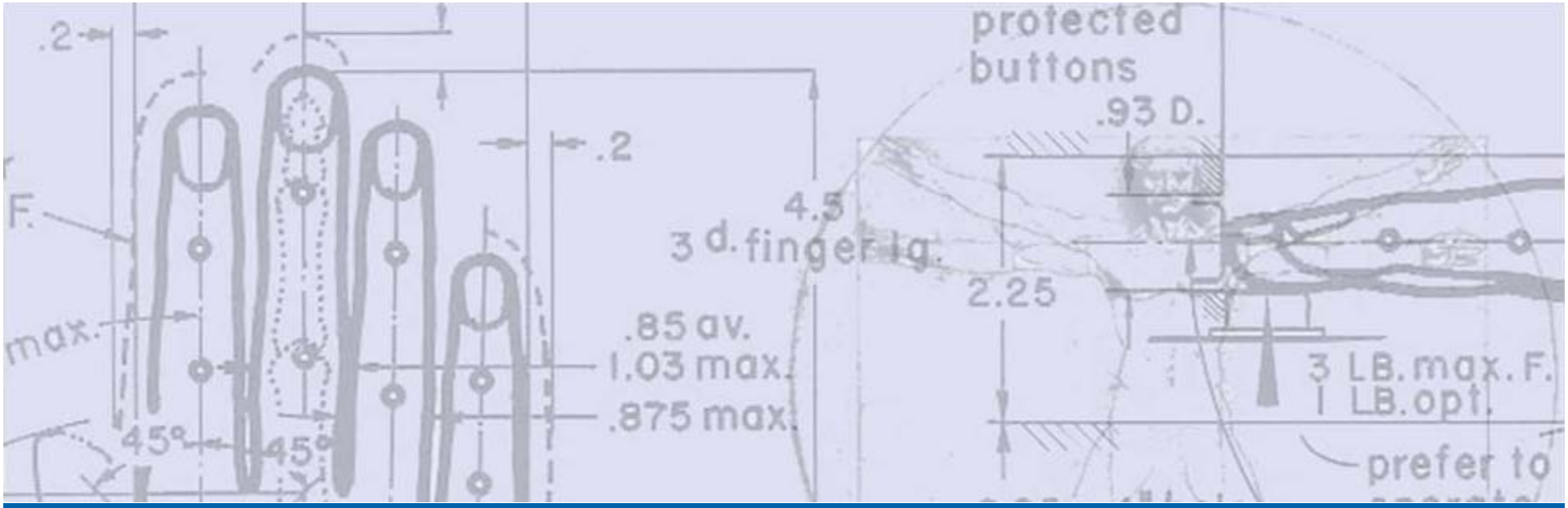

AN EVOLUTION OF USABILITY ANALYSIS

THE SYSTEM OF SYSTEMS USABILITY (SOS-U) FRAMEWORK

Frank C. Lacson, M.S.
Matthew R. Risser, Ph.D.

SoSECIE Presentation June 27, 2013

Pacific Science & Engineering Group

franklacson@pacific-science.com

National Defense Industrial Association. 15th Annual Systems Engineering Conference. October 22-26, 2012

Human Systems Integration

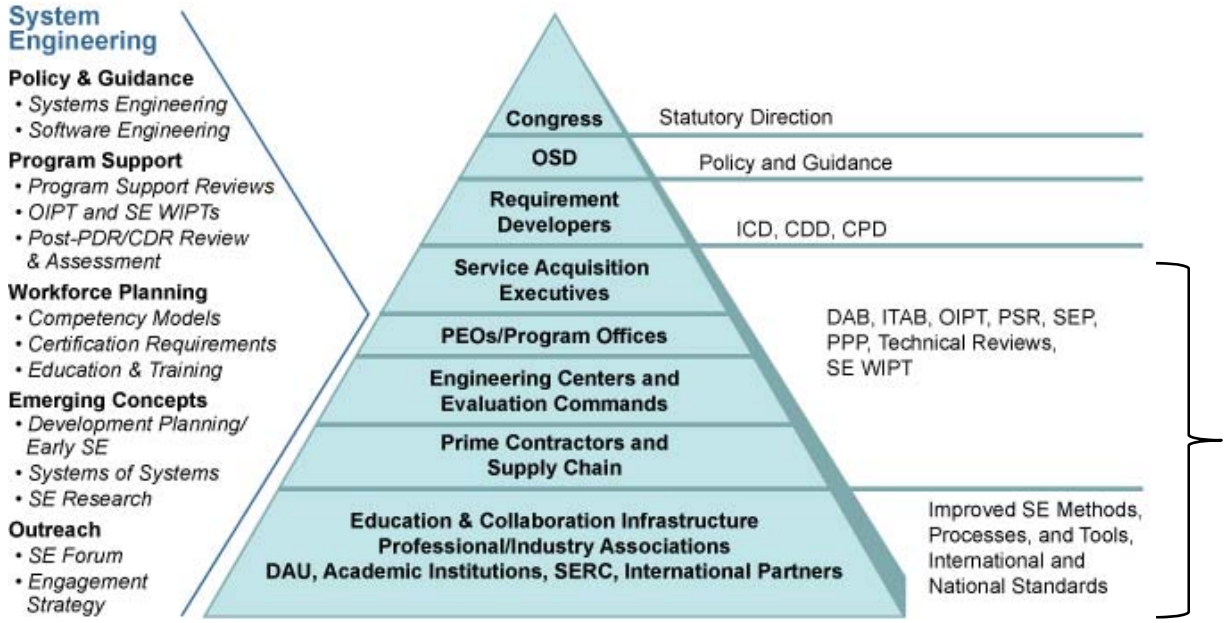

We are HSI practitioners in support of SE for Navy C4I systems

- Human Systems Integration (HSI)
  - A specialty engineering discipline w/in SE, integrated into DoD Acquisition*
  - Domains: **Human Factors Engineering**, Manpower, Personnel, Training, Safety, Occupational Health, Survivability, Habitability, Environment

*DoDI 5000.02, DAG Ch. 6

HSI in SoSE Example

- During operations, there are recurring needs to share products across warfare areas
  - Each warfare area has defined work processes that utilize a map. The map differs across warfare area (C2, ISR, METOC)
  - This need is complicated by map software incompatibilities
- A viable solution requires HSI inputs for proper integration and interoperability across Information Dominance Corps (IDC) users in a SoSE
  - Identify SoSE capability gaps and requirements
  - Realign IDC personnel with tasks and equipment to shorten knowledge and capability gaps
- HSI matches platform capabilities to operational requirements
  - MPT advantages: greater time, cost, and billet efficiencies

*Information Dominance: Long-term vision for the role of IT in operations

HSI in SoSE Example (contd.)

- HSI identifies KSA gaps to reduce the need for stove-piped systems

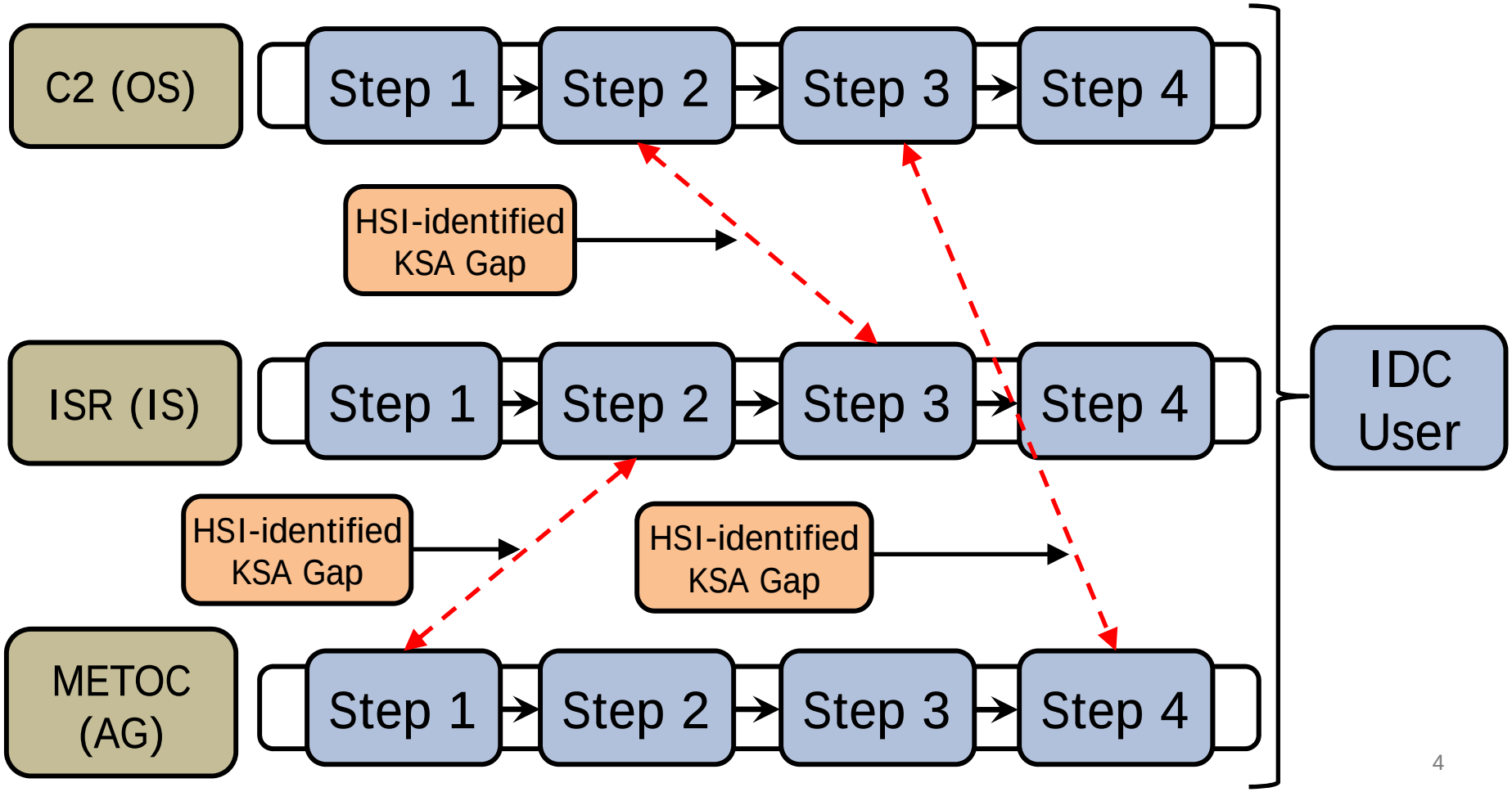

Objectives

- Describe the limitations and realities of conducting traditional usability analyses for SoSE
- Communicate the risks and opportunities of limited SoS usability on human and system performance
- Reveal requirements for a framework to scope development of SoS-specific usability requirements, methods, and outputs
- Provide examples and seed discussion topics to explore additional SoS-related usability issues, use cases, and methods

Usability for System of Systems (SoS)

A definition of Usability (ISO 9241)*

"...the extent to which a product can be **used** by specified **users** to achieve specified **goals** with **effectiveness**, **efficiency,** and **satisfaction** in a specified **context of use**"

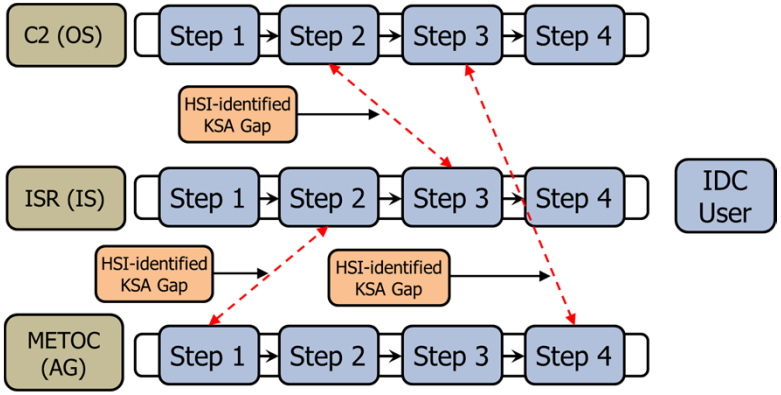

How do HSI practitioners ensure SoS usability?

**International Organization for Standards (1998). ISO 9241 – 11: Ergonomic requirements for office work with visual display terminals (VDTs) – Part II: Guidance on usability.*

Problem Statement

- HSI practitioners continue to be successful in improving usability for individual systems
  - However, for SoS usability, capability gaps remain for usability tools, processes, and mindset
  - This requires the HSI practitioner community to evolve tools and processes to remain effective and relevant for SoSE
- Why? Usability in also an emergent property
  - Medical device example: Fatigue and system familiarity
  - Widgets and Apps example: Controls, colors, inter-widget interaction
  - System usability does not guarantee System of Systems usability
- Impacts on human performance due to unrealized HSI risks
- Costly and unexpected re-work revealed during Developmental and Operational Testing (DT/OT)

System of Systems Usability

Table 3-2. Technical & Technical Management Processes as They Apply to the Core Elements of SoS SE

Affected Core SoSE elements	Technical Processes								Technical Management Processes							
	Rqts Devl	Logical Analysis	Design Solution	Implement	Integrate	Verify	Validate	Transition	Decision Analysis	Tech Planning	Tech Assess	Rqts Mgmt	Risk Mgmt	Config Mgmt	Data Mgmt	Interface Mgmt
Translating Capability Objectives	X											X	X	X	X	
Understanding Systems and Relationships		X											X	X	X	X
Assessing Performance to Capability Objectives							X		X		X		X		X	
Developing and Evolving an SoS Architecture	X	X	X						X	X		X	X	X	X	X
Monitoring and Assessing Changes									X				X	X	X	X
Addressing Requirements and Solution Options	X		X						X	X		X	X	X	X	X
Orchestrating Upgrades to SoS				X	X	X	X	X	X		X	X	X		X	X

**Systems Engineering Guide for System of Systems (2008).*

System of Systems Usability (cont.)

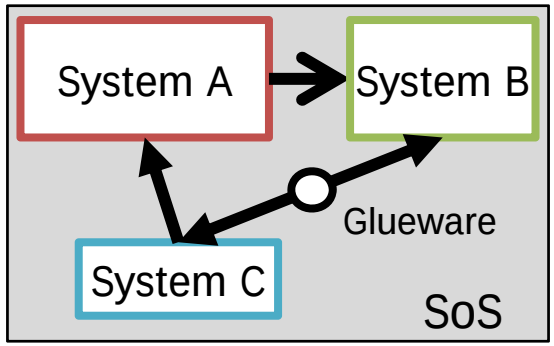

- Core Usability Questions
  - Who are the users? What info is needed?
  - What requirements are affected by usability?
  - How is usability measured?
  - What is the scope of the impacted interfaces?
  - Who pays for usability improvements?
  - How is usability Return On Investment (ROI) demonstrated?
- Generic SoS Definition (System A, B, C)
  - Developmental items (Glueware): Alert, Status Display, Storage
  - Different owners (by color), budgets (size), information flows
- SoS examples
  - C2, ISR, METOC
  - IT system w/ Navy platforms

SoS Usability Adaptation #1: User Needs

- Who are the users? What info is needed?
- As-Is: Single HSI Profile
  - System designed and integrated w/ its own user group: C2 (OS), ISR (IS), METOC (AG)
  - Stove-piped domain and HSI technical expertise
- To-Be: Hybrid HSI Profile
  - IDC user: C2+ISR+METOC+IT
  - Example: Shared C2 map available to ISR and METOC
  - For Intel and METOC users: What subset of data is appropriate? What new KSAs are needed to maintain decision quality?

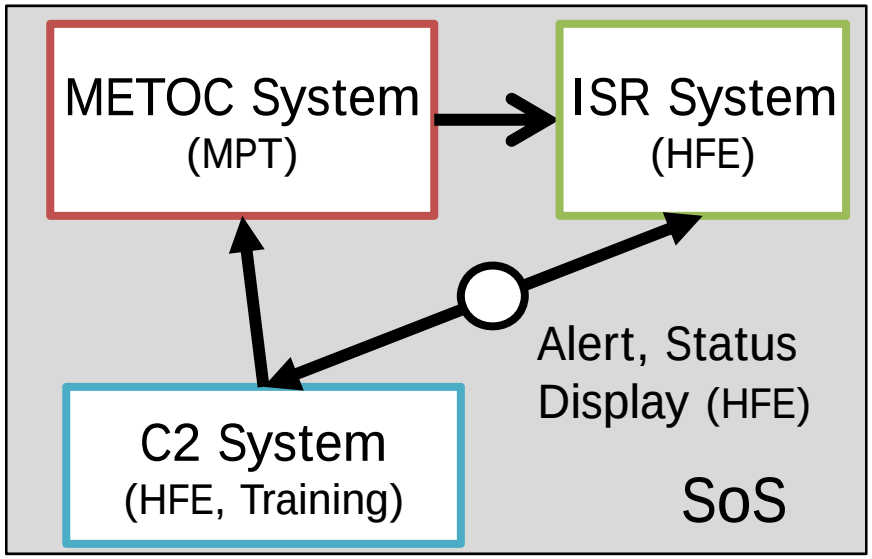

- SoS Usability Implications
  - HSI domains unknowingly interrelated
  - Increased human performance risk as well as potential for benefits
  - Cross-domain operational and technical expertise (for HSI)

SoS Usability Adaptation #2: Unit of Usability Analysis

- Core usability questions
  - What requirements are affected by usability?
  - What is the scope of the impacted interfaces?
  - How is usability measured?
- As-Is: "Component Usability"
  - Feasible to derive HSI requirements from system reqs
  - Efficient re-use of tools and processes from usability best practices (Single system)
- To-Be: "Capability Usability"
  - Need for HSI consistency and interoperability requirements
  - Processes needed to establish effective re-use for SoS

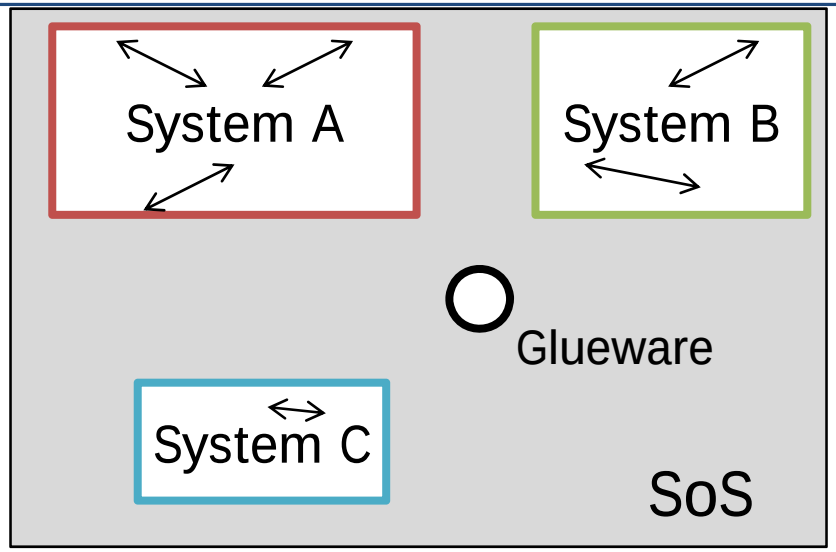

- SoS Usability Implications
  - Shift priorities towards mapping the SoS user interface space
  - Seize opportunities to support higher-order user tasks (e.g., collaboration)

SoS Usability Adaptation #3: Customer Needs and Constraints

- Core usability questions
  - Who pays for usability improvements?
  - How is usability Return On Investment (ROI) demonstrated?
- As-Is: Fixed PMO
  - Managed, budgeted, traced clearly to requirements
  - "Waterfall" solutions for directed systems
- To-Be: Dynamic PMO
  - Mix of legacy/dev. systems, budgets, acquisition phases
  - Streamlined acquisition cycles (e.g., agile software dev. for IT systems)

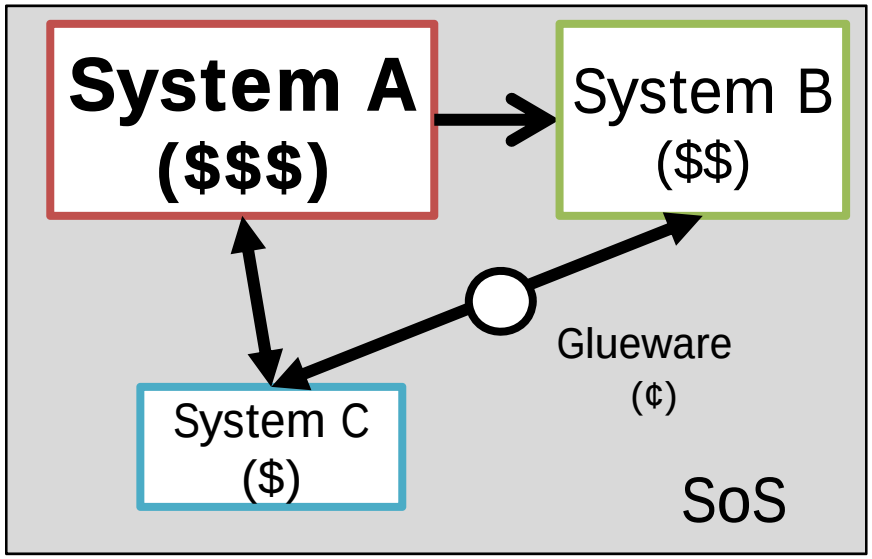

- SoS Usability Implications
  - Adapt usability artifacts to match SoS type
  - Shift towards traceability of HSI-related requirements to SoS requirements
  - Shift towards communication of the ROI of usability

The SoS-U Framework

- Summary of SoS Usability Adaptations
  - User Needs
  - Unit of Usability Analysis
  - Customer Needs and Constraints
- The System of Systems Usability (SoS-U) Framework
  - A functional path for addressing SoS usability issues
  - Provides organization of SoS-relevant usability processes and tools
  - Fosters collaboration and discussion between like-minded HSI practitioners and SoSE stakeholders
- SoS-U is not
  - A solution to a specific SoS or Program Of Record: Each SoS contains a unique set of constraints
  - Limited to IT systems: Human interfaces = user interfaces + physical interfaces (ergonomics)

The SoS-U Framework

Module	Description	#1: User Needs	#2: Unit of Usability Analysis	#3: Customer Needs, Constraints
Architecture & Requirements	Models of human interfaces, data, and information flows Derived requirements with SoS usability implications	X	X	
Methods	Collection of usability best practices suitable for the SoS environment		X	X
Metrics	Development of usability metrics to measure impacts on higher-order tasks Communicate human performance improvements to SoS stakeholders	X		X

Module 1: SoS Usability Architecture and Requirements

Description	#1 User Needs	#2 Unit of Usability Analysis	#3 Customer Needs and Constraints
Models of human interfaces, data, and information flows Derived requirements with SoS usability implications	Analyze and derive usability-related requirements	Visualize and scope SoS usability space Identify UI dev. constraints, data and information flows	TBD

- Artifacts
  - **Workflows to inform DoDAF artifacts, usability analysis**
  - Processes to elicit, derive, and trace usability-related requirements from SoS requirements
  - Methods to identify and document human interfaces from interface management processes

Module 1 Example: Workflow analysis

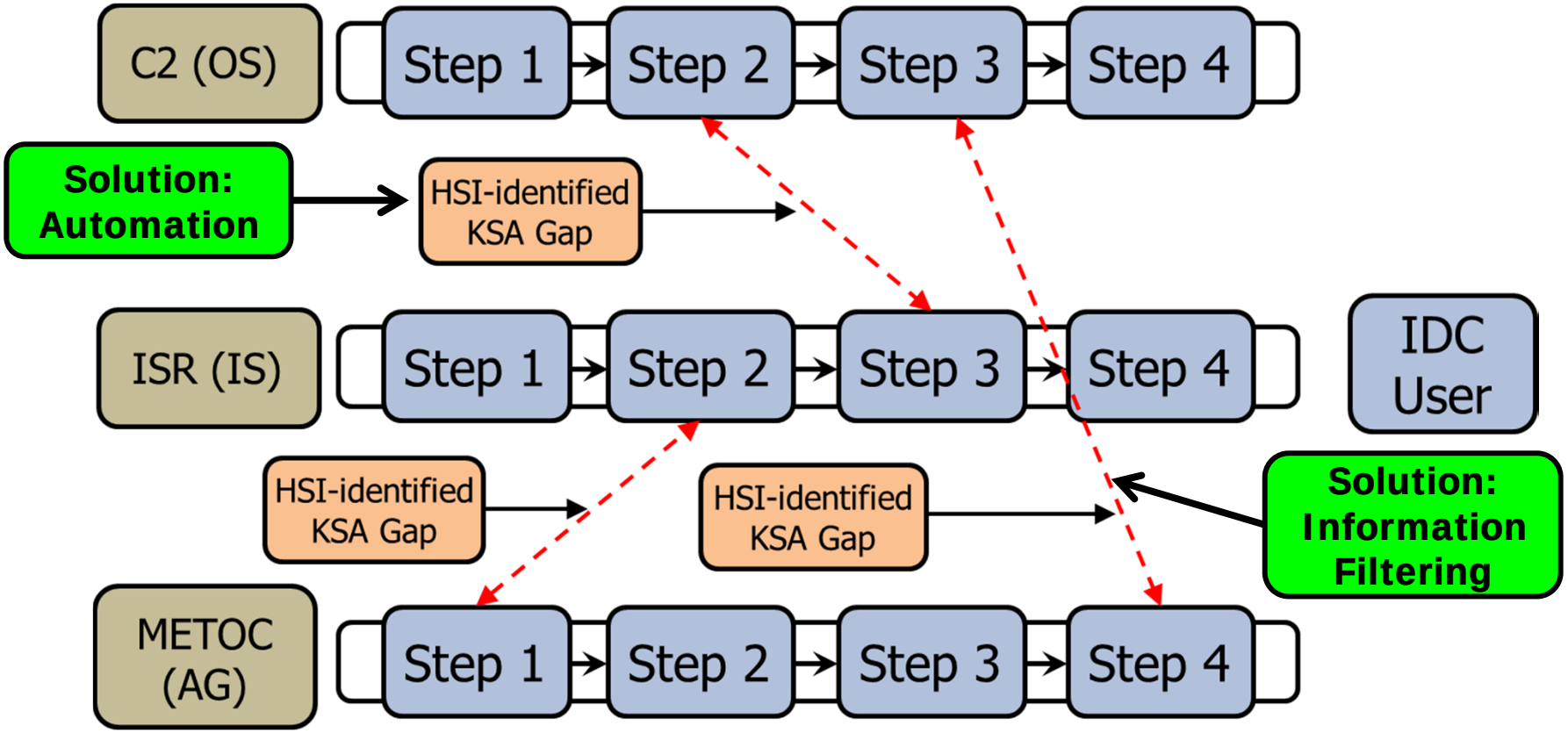

Balance between expanding KSAs and tailoring information for the IDC user

Module 1: SoS Usability Architecture and Requirements (cont.)

- Anticipated Impact
  - Improved **effectiveness** of usability solutions by focusing on key SoS interfaces and human performance risks
- Way forward
  - Workflow development use cases for SoS types: Virtual, Collaborative, Acknowledged, Directed
  - Quick SoS Assessment: Guidance on core SoS usability issues, workflow analysis

Module 2: SoS Usability Methods

Description	#1 User Needs	#2 Unit of Usability Analysis	#3 Customer Needs and Constraints
Collection of usability best practices suitable for the SoS environment	TBD	Identify reusable SoS usability guidelines Leverage both existing and emerging usability techniques	Ensure a feasible range of usability analysis options

- Artifacts
  - Usability methods tailored for SoS constraints
    - **Usability Heuristic (Guideline) Reviews**
    - Usability data collection materials, checklists
    - Protocols: User Assessments, User Working Groups
  - Style Guides to improve SoS user interface consistency, especially for SoS developmental items (Glueware)

Module 2: Example artifact - SoS Usability Heuristics

- Existing collections of usability heuristics can be converted based on key SoS characteristics
  - Nielsen heuristics: Match between system and real world, consistency and standards...
  - Gerhardt-Powals: Automate unwanted workload, Reduce uncertainty, Fuse data...
- Leverage existing processes to develop usability heuristics
  1. Determine suitable systems for the heuristic
  2. Highlight key usability issues for the SoS
  3. Leverage existing heuristics, best practices
  4. Specify heuristics, adhere to templates
  5. Link to case studies, CONOPS, user tests

DRAFT process: Adapted for SoS*

**Rusu et al. (2011). A Methodology to Establish Usability Heuristics. ACHI 2011: The Fourth International Conference on Advances in Computer-Human Interfaces.*

Module 2: Example artifact - SoS Usability Heuristics (cont.)

Traditional Usability Heuristic (Legacy)*	Emergent Usability Trait	DRAFT SoS Usability Heuristic
Visibility of System Status "The system should always keep users informed about what is going on..."	Information overload due to expanded scope of system: "Christmas Tree effect"	Visibility of SoS Context "The SoS should always keep users informed **on what systems are being accessed**..."
Error prevention "... a careful design ... prevents a problem from occurring in the first place"	Excess workload on error management for systems beyond user control	Error robustness "... a careful design ... prevents **critical errors or propagation errors** from occurring in the first place"

**Nielsen, J. and Molich, R. (1990). Heuristic evaluation of user interfaces. Proc. ACM CHI'90 Conf.*
**Nielsen, J. (1994). Usability Heuristic Evaluation.*

Module 2: SoS Usability Methods (cont.)

- Anticipated Impact
  - Improved **efficiency** of usability recommendations via a fundamental understanding of core SoS usability issues
- Way Forward
  - Integrate industry standards (e.g., ISO, EIA, IEEE)
  - Expand SoS user assessment methods
  - Apply lessons learned from SoS and : Usability w/ mixed user interfaces (e.g., desktop vs. tablets/handhelds), Widget usability

Module 3: SoS Usability Metrics

Description	#1 User Needs	#2 Unit of Usability Analysis	#3 Customer Needs and Constraints
Development of usability metrics to measure impacts on higher-order tasks Communicate human performance improvements to SoS stakeholders	Explore interdependencies between HSI Domains	TBD	Adapt to evolutions in software development, SE Quantify and validate human and system performance impacts

- Artifacts
  - Modeling and Simulation to predict and quantify usability improvements across an SoS
  - Metrics to predict usability-related impacts to SoS KPPs
  - ROI analysis techniques to inform SoSE trade studies

Module 3: SoS Usability Metrics (cont.)

- Way forward
  - Collect usability metrics that reflect higher order SoS activities
    - Collaboration
    - Information sharing
    - Automation use
  - Adapt existing M&S tools (e.g., IMPRINT) for SoS modeling
- Anticipated Impact
  - Improved **satisfaction** of **users** and customer **goals** via quantification of usability benefits

The SoS-U Framework – Summary

Module	Description	Artifacts	Impacts
Architecture & Requirements	Models of human interfaces, data, and information flows Derived requirements with SoS usability implications	Workflows, Requirements, Human Interface mapping	Improved effectiveness of usability solutions by focusing on key SoS interfaces and human performance risks
Methods	Collection of usability best practices suitable for the SoS environment	Usability guidance, Style Guides	Improved efficiency of usability recommendations via a fundamental understanding of core SoS usability issues
Metrics	Development of usability metrics to measure impacts on higher-order tasks Communicate human performance improvements to SoS stakeholders	Modeling and Simulation, SoS KPPs, ROI analysis	Improved satisfaction of users and customer goals via quantification of usability benefits

Summary of Presentation

- Capability, process, and tool gaps exist for Systems of Systems Usability
  - Call for HSI to work towards a solution, as one of the user-centered stakeholders to SoSE
- The SoS-U Framework is an organizing representation
  - Architecture, requirements, usability methods, metrics, and products to provide HSI to SoSE core processes
  - Leverages traditional usability tools while providing an avenue for innovation in tools and processes
- SoS-U "Acquisition Cycle": Materiel Solution Analysis
  - Yet based on current HSI-related program support to SE
- "Systems of Systems Usability wasn't built in a day"
  - HSI practitioners to learn from the rest of the SoSE enterprise via further SoSCIE involvement

Questions?

For more information, please contact:

Pacific Science & Engineering Group
(858) 535-1661

Frank C. Lacson

franklacson@pacific-science.com