IFT-4 MISSION SEQUENCE

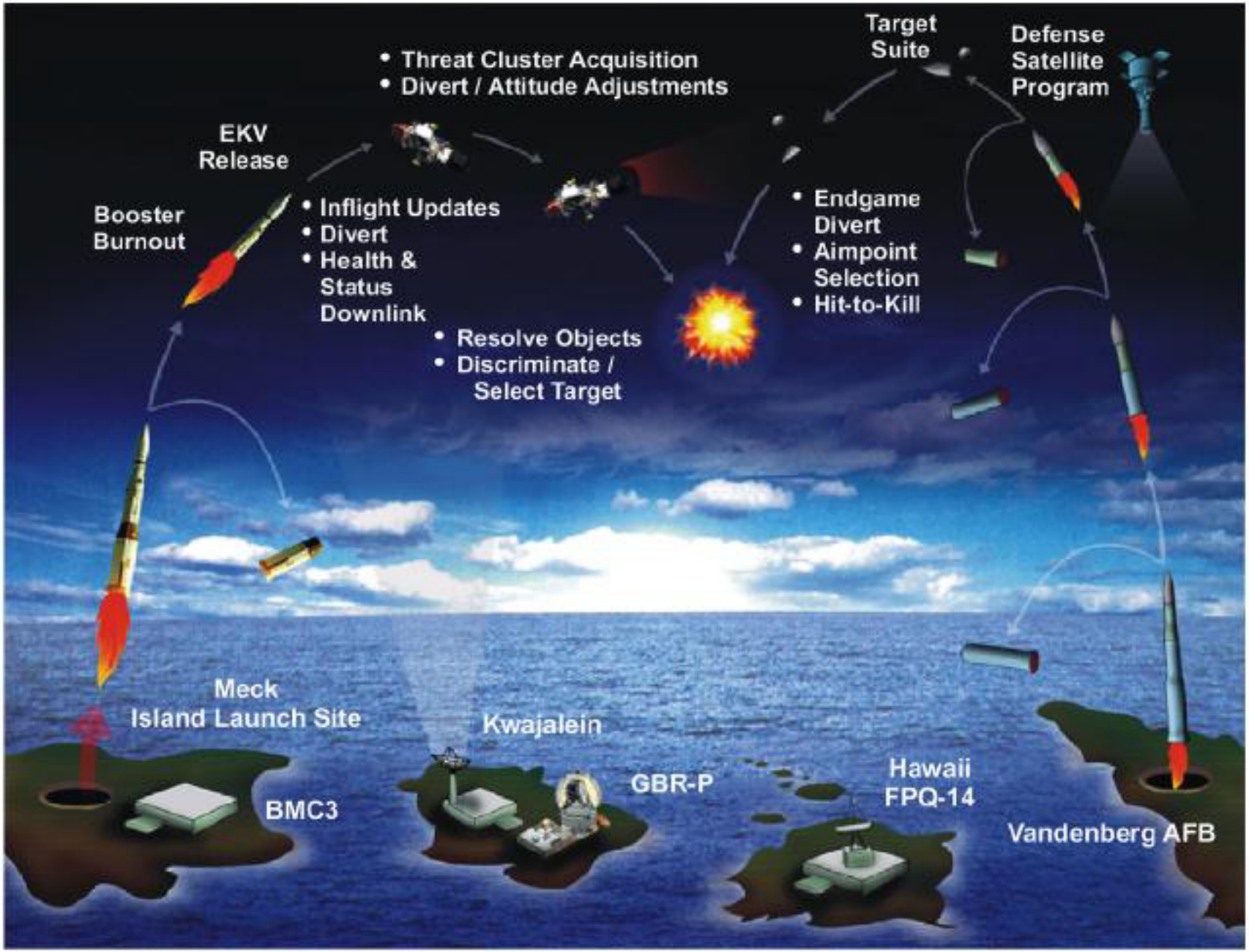

RAYTHEON KILL VEHICLE

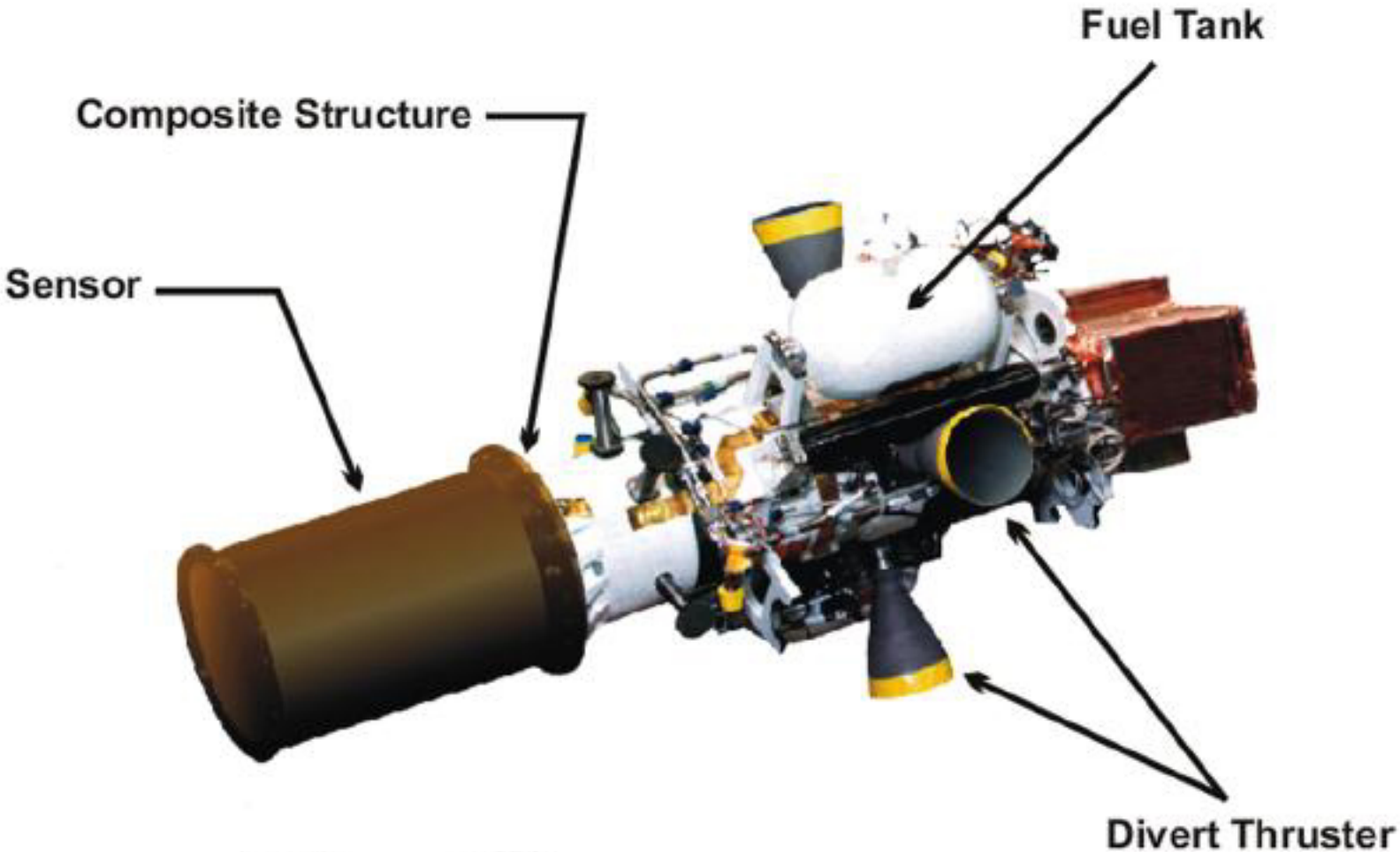

Length	~ 55 in
Diameter	~ 23 in
EFT Weight	~ 121 lbs